PLAN URBANISTIC ZONAL

„Schimbare partiala destinatie teren, din zona pedrea de protectie in zona industriala (unitati industriale / depozitare) pentru realizarea obiectivului "Modernizarea statiei de tratare mecano-biologica a deseurilor Ploiesti, prin construire linie producere SRF, in vederea obtinerii energiei din deseuri"

Consiliul Judetan Prahova

Nr. Cad. 145874, Tarla 13, Parcela CTD 194, Municipiul Ploiesti, Judetul Prahova

Retele tehnico-edilitare

Parcel (NC 145878)

No. Pnt.	Outline points coord. X [m]	Y [m]	Lengths sides L(i,i+1)
36	384740.140	585653.700	23.883
37	384763.660	585657.850	33.064
12	384787.020	585634.450	32.001
13	384794.560	585603.350	58.778
14	384770.054	585549.924	47.865
15	384745.131	585509.059	47.530
16	384712.500	585474.500	73.951
17	384653.406	585430.040	27.835
18	384630.573	585414.121	40.329
19	384592.109	585402.000	154.819
20	384437.619	585391.908	19.516
21	384418.246	585389.548	15.540
38	384419.128	585405.063	16.667
39	384425.028	585420.651	16.667
40	384440.360	585427.188	26.093
41	384466.453	585427.189	13.489
42	384479.929	585427.788	15.929
43	384495.445	585431.390	7.605
44	384503.050	585431.466	37.938
45	384540.618	585436.748	4.229
46	384540.442	585440.973	20.517
47	384560.652	585444.511	49.907
48	384608.251	585459.511	18.389
49	384623.336	585470.028	53.651
50	384665.030	585503.793	33.298
51	384681.435	585532.769	34.165
52	384679.711	585566.890	47.417
53	384677.484	585614.255	20.768
54	384674.749	585634.842	41.168
55	384714.270	585646.370	26.888
A(NC 145878)=27667 mp P=1059.898m			

Parcel (Zona neidentificata1)

No. Pnt.	Outline points coord. X [m]	Y [m]	Lengths sides L(i,i+1)
56	384681.650	585758.431	43.654
60	384692.381	585716.117	46.260
59	384696.021	585670.000	8.445
58	384703.950	585667.093	28.582
57	384732.467	585669.014	24.511
56	384755.833	585676.419	30.990
11	384785.165	585686.421	52.004
12	384787.020	585634.450	33.064
37	384763.660	585657.850	23.883
36	384740.140	585653.700	26.888
55	384714.270	585646.370	41.168
54	384674.749	585634.842	87.488
64	384663.228	585721.568	20.319
58	384665.335	585741.777	9.075
62	384670.882	585748.960	14.340
A(Zona neidentificata1)=5043 mp P=490.673m			

Parcel (NC 144725)

No. Pnt.	Outline points coord. X [m]	Y [m]	Lengths sides L(i,i+1)
6	384753.965	585820.027	41.338
7	384771.434	585782.561	15.760
8	384758.968	585772.918	23.949
9	384769.976	585751.649	49.645
10	384783.647	585703.923	17.568
11	384785.165	585686.421	30.990
56	384755.833	585676.419	24.511
57	384732.467	585669.014	28.582
58	384703.950	585667.093	8.445
59	384696.021	585670.000	46.260
60	384692.381	585716.117	43.654
61	384681.650	585758.431	14.340
62	384670.882	585748.960	9.075
63	384665.335	585741.777	20.319
64	384663.228	585721.568	87.488
54	384674.749	585634.842	20.768
53	384677.484	585614.255	47.417
52	384679.711	585566.890	34.165
51	384681.435	585532.769	33.298
50	384665.030	585503.793	53.651
49	384623.336	585470.028	18.389
48	384608.251	585459.511	49.907
47	384560.652	585444.511	20.517
46	384540.442	585440.973	3.012
65	384540.318	585443.982	19.932
66	384559.954	585447.402	49.141
67	384606.900	585461.924	2.654
68	384605.897	585464.381	18.210
69	384620.579	585475.153	2.898
70	384621.872	585472.559	52.515
71	384662.615	585505.692	31.905
72	384678.466	585533.381	33.513
73	384676.771	585566.851	46.661
74	384674.475	585613.455	108.890
75	384659.820	585721.354	22.735
76	384660.335	585744.083	12.434
77	384647.958	585745.272	10.544
78	384643.653	585754.897	8.687
79	384635.074	585756.265	10.845
80	384631.286	585766.427	65.726
81	384608.329	585828.013	23.848
4	384607.354	585851.841	11.607
5	384618.961	585851.860	138.706
A(NC 144725)=20291 mp P=1414.498m			

Parcel (Zona aferenta DN1A)

No. Pnt.	Outline points coord. X [m]	Y [m]	Lengths sides L(i,i+1)
21	384418.246	585389.548	33.989
22	384384.277	585388.382	16.950
203	384383.695	585405.322	49.907
204	384381.217	585455.167	94.700
205	384376.951	585549.771	41.713
23	384374.289	585591.399	6.473
24	384374.497	585597.869	120.351
25	384372.011	585718.194	4.464
26	384371.765	585722.651	0.158
27	384371.923	585722.659	22.092
206	384370.106	585744.676	45.403
28	384366.333	585789.922	55.161
207	384353.253	585843.510	41.299
29	384342.257	585883.318	34.643
30	384327.669	585914.740	33.867
1	384358.387	585929.002	32.113
101	384371.460	585899.670	44.158
102	384385.340	585857.750	34.026
100	384393.790	585824.790	37.419
99	384400.000	585787.890	34.186
98	384403.360	585753.870	53.637
97	384406.040	585700.300	78.462
96	384409.160	585621.900	53.974
93	384411.228	585567.966	22.513
94	384412.090	585545.470	72.276
95	384413.602	585473.210	20.409
90	384414.029	585452.805	5.340
85	384414.141	585447.466	17.513
86	384414.669	585429.961	40.571
A(Zona aferenta DN1A)=18344 mp P=1147.767m			

Parcel (NC 145874)

No. Pnt.	Outline points coord. X [m]	Y [m]	Lengths sides L(i,i+1)
65	384540.318	585443.982	19.932
66	384559.954	585447.402	49.141
67	384606.900	585461.924	2.654
68	384605.897	585464.381	18.210
69	384620.579	585475.153	2.898
70	384621.872	585472.559	52.515
71	384662.615	585505.692	31.905
72	384678.466	585533.381	33.513
73	384676.771	585566.851	46.661
74	384674.475	585613.455	108.890
75	384659.820	585721.354	22.735
76	384660.335	585744.083	12.434
77	384647.958	585745.272	10.544
78	384643.653	585754.897	8.687
79	384635.074	585756.265	10.845
80	384631.286	585766.427	92.735
82	384541.435	585743.481	27.624
83	384525.031	585721.255	45.343
84	384540.642	585678.684	26.738
85	384514.477	585673.176	102.970
86	384521.137	585570.422	13.924
87	384535.059	585570.676	101.815
88	384539.281	585468.949	12.005
89	384539.779	585456.954	12.983
A(NC 145874)=40051 mp P=867.700m			

Parcel (NC 147219)

No. Pnt.	Outline points coord. X [m]	Y [m]	Lengths sides L(i,i+1)
90	384414.141	585447.466	17.513
91	384414.669	585429.961	40.571
21	384418.246	585389.548	15.540
38	384419.128	585405.063	16.667
39	384425.028	585420.651	16.667
40	384440.360	585427.188	26.093
41	384466.453	585427.189	13.489
42	384479.929	585427.788	15.929
43	384495.445	585431.390	7.605
44	384503.050	585431.466	37.938
45	384540.618	585436.748	4.229
46	384540.442	585440.973	3.012
65	384540.318	585443.982	12.983
89	384539.779	585456.954	35.793
92	384504.346	585451.887	36.377
93	384468.785	585444.226	31.454
94	384437.342	585445.067	24.564
95	384414.029	585452.805	5.340
A(NC 147219)=2661 mp P=361.764m			

Parcel (NC 144005)

No. Pnt.	Outline points coord. X [m]	Y [m]	Lengths sides L(i,i+1)
96	384433.368	585473.624	94.799
97	384429.733	585568.353	18.509
98	384411.228	585567.966	22.513
99	384412.090	585545.470	72.276
100	384413.602	585473.210	19.770
A(NC 144005)=1800 mp P=227.866m			

Parcel (NC 130763)

No. Pnt.	Outline points coord. X [m]	Y [m]	Lengths sides L(i,i+1)
80	384631.286	585766.427	65.726
81	384608.329	585828.013	23.848
4	384607.354	585851.841	95.304
3	384512.050	585851.680	115.082
2	384511.326	585966.760	157.531
1	384358.387	585929.002	32.113
101	384371.460	585899.670	44.158
102	384385.340	585857.750	34.026
103	384393.790	585824.790	37.419
104	384400.000	585787.890	34.186
105	384403.360	585753.870	53.637
106	384406.040	585700.300	78.462
107	384409.160	585621.900	53.974
98	384411.228	585567.966	18.509
97	384429.733	585568.353	94.799
96	384433.368	585473.624	19.770
100	384413.602	585473.210	20.409
95	384414.029	585452.805	24.564
94	384437.342	585445.067	31.454
93	384468.785	585444.226	36.377
92	384504.346	585451.887	35.793
89	384539.779	585456.954	12.005
88	384539.281	585468.949	101.815
87	384535.059	585570.676	13.924
86	384521.137	585570.422	102.970
85	384514.477	585673.176	26.738
84	384540.642	585678.684	45.343
83	384525.031	585721.255	27.624
82	384541.435	585743.481	92.735
A(NC 130763)=70000 mp P=1530.295m			

Parcel (C1)

No. Pnt.	Outline points coord. X [m]	Y [m]	Lengths sides L(i,i+1)
108	384474.248	585462.259	1.017
109	384475.264	585462.300	2.059
110	384475.194	585464.358	1.004
111	384474.192	585464.302	2.580
112	384474.047	585466.878	4.809
113	384469.241	585466.711	2.990
114	384469.073	585469.696	12.192
115	384456.888	585469.287	9.111
116	384457.239	585460.183	17.077
117	384474.306	585460.775	1.485
A(C1)=143 mp P=54.323m			

Parcel (C2)

No. Pnt.	Outline points coord. X [m]	Y [m]	Lengths sides L(i,i+1)
118	384495.396	585466.237	6.071
119	384494.002	585472.146	12.227
120	384482.101	585469.343	6.108
121	384483.521	585463.402	12.209
A(C2)=74 mp P=36.615m			

Parcel (C3)

No. Pnt.	Outline points coord. X [m]	Y [m]	Lengths sides L(i,i+1)
122	384464.092	585522.806	25.020
123	384465.045	585497.804	32.521
124	384497.539	585499.120	25.020
125	384496.585	585524.122	32.520
A(C3)=814 mp P=115.081m			

Parcel (C4)

No. Pnt.	Outline points coord. X [m]	Y [m]	Lengths sides L(i,i+1)
125	384496.585	585524.122	42.529
126	384494.882	585566.617	32.500
127	384462.409	585565.303	42.530
122	384464.092	585522.806	32.520
A(C4)=1383 mp P=150.079m			

Parcel (C5)

No. Pnt.	Outline points coord. X [m]	Y [m]	Lengths sides L(i,i+1)
128	384505.957	585616.861	134.200
129	384500.522	585750.951	50.600
130	384449.964	585748.893	134.200
131	384455.398	585614.803	50.601
A(C5)=6791 mp P=369.601m			

Parcel (C6)

No. Pnt.	Outline points coord. X [m]	Y [m]	Lengths sides L(i,i+1)
132	384524.343	585682.340	14.870
133	384523.742	585697.198	9.930
134	384513.820	585696.802	14.943
135	384514.457	585681.873	9.897
A(C6)=148 mp P=49.640m			

Parcel (C7)

No. Pnt.	Outline points coord. X [m]	Y [m]	Lengths sides L(i,i+1)
136	384521.680	585741.475	9.918
137	384511.773	585741.015	14.960
138	384512.380	585726.067	9.918
139	384522.287	585726.527	14.960
A(C7)=148 mp P=49.756m			

Parcel (C8)

No. Pnt.	Outline points coord. X [m]	Y [m]	Lengths sides L(i,i+1)
140	384499.132	585786.428	10.601
141	384488.541	585785.979	29.500
142	384489.718	585756.502	10.601
143	384500.309	585756.952	29.499
A(C8)=313 mp P=80.201m			

Parcel (C9)

No. Pnt.	Outline points coord. X [m]	Y [m]	Lengths sides L(i,i+1)
144	384474.792	585755.935	24.800
145	384473.663	585780.709	7.801
146	384465.869	585780.389	24.800
147	384466.999	585755.615	7.800
A(C9)=193 mp P=65.200m			

Parcel (C10)

No. Pnt.	Outline points coord. X [m]	Y [m]	Lengths sides L(i,i+1)
148	384611.234	585773.603	65.000
149	384595.374	585836.638	45.001
150	384551.839	585825.246	65.000
151	384567.700	585762.211	45.000
A(C10)=2925 mp P=220.000m			

Parcel (C11)

No. Pnt.	Outline points coord. X [m]	Y [m]	Lengths sides L(i,i+1)
152	384448.902	585474.325	3.600
153	384445.307	585474.128	18.820
154	384446.310	585455.335	3.600
155	384449.905	585455.532	18.820
A(C11)=68 mp P=44.840m			

Parcel (C12)

No. Pnt.	Outline points coord. X [m]	Y [m]	Lengths sides L(i,i+1)
156	384528.649	585517.366	2.300
157	384528.467	585519.659	3.300
158	384525.173	585519.463	2.300
159	384525.355	585517.170	3.300
A(C12)=8 mp P=11.200m			

Parcel (C13)

No. Pnt.	Outline points coord. X [m]	Y [m]	Lengths sides L(i,i+1)
160	384532.018	585533.438	0.881
161	384531.963	585534.317	0.724
162	384531.770	585535.015	0.952
163	384531.325	585535.857	1.215
164	384530.483	585536.733	1.236
165	384529.391	585537.313	1.406
166	384528.000	585537.519	1.309
167	384526.718	585537.254	1.041
168	384525.808	585536.748	1.090
169	384525.036	585535.979	1.310
170	384524.433	585534.816	1.121
171	384524.249	585533.710	1.154
172	384524.398	585532.566	1.205
173	384524.905	585531.473	1.219
174	384525.733	585530.579	0.959
175	384526.554	585530.084	1.247
176	384527.759	585529.765	0.978
177	384528.737	585529.794	1.449
178	384530.102	585530.281	0.747
179	384530.707	585530.719	0.963
180	384531.345	585531.440	0.985
181	384531.793	585532.317	1.143
A(C13)=47 mp P=24.334m			

Parcel (C14)

No. Pnt.	Outline points coord. X [m]	Y [m]	Lengths sides L(i,i+1)
182	384522.049	585524.212	6.170
183	384515.881	585524.067	2.462
184	384515.982	585521.607	6.156
185	384522.136	585521.782	2.432
A(C14)=15 mp P=17.220m			

Parcel (C15)

No. Pnt.	Outline points coord. X [m]	Y [m]	Lengths sides L(i,i+1)
186	384518.387	585524.126	3.058
187	384518.261	585527.181	2.447
188	384515.816	585527.078	3.012
183	384515.881	585524.067	2.507
A(C15)=8 mp P=11.023m			

Parcel (C16)

No. Pnt.	Outline points coord. X [m]	Y [m]	Lengths sides L(i,i+1)
189	384521.978	585527.337	2.436
190	384521.884	585529.771	6.173
191	384515.716	585529.535	2.459
188	384515.816	585527.078	2.447
187	384518.261	585527.181	3.720
A(C16)=15 mp P=17.235m			

Parcel (C17)

No. Pnt.	Outline points coord. X [m]	Y [m]	Lengths sides L(i,i+1)
192	384515.702	585531.648	6.174
193	384521.869	585531.941	3.200
194	384521.687	585535.136	6.130
195	384515.564	585534.852	3.207
A(C17)=20 mp P=18.711m			

Parcel (C18)

No. Pnt.	Outline points coord. X [m]	Y [m]	Lengths sides L(i,i+1)
196	384446.884	585796.065	6.010
197	384440.877	585795.876	12.600
198	384441.391	585783.286	6.010
199	384447.398	585783.475	12.600
A(C18)=76 mp P=37.221m			

Parcel (C19)

No. Pnt.	Outline points coord. X [m]	Y [m]	Lengths sides L(i,i+1)
200	384441.857	585459.357	5.273
201	384441.680	585464.627	2.605
202	384439.076	585464.554	5.273
203	384439.254	585459.284	2.604
A(C19)=14 mp P=15.755m			

Parcel (C20)

No. Pnt.	Outline points coord. X [m]	Y [m]	Lengths sides L(i,i+1)
204	384511.244	585681.804	2.492
205	384513.735	585681.856	6.254
206	384513.529	585688.107	2.492
207	384511.038	585688.055	6.254
A(C20)=16 mp P=17.492m			

Parcela (Zona de studiu)

No. Pnt.	Outline points coord. X [m]	Y [m]	Lengths sides L(i,i+1)
1	384358.387	585929.002	157.531
2	384511.326	585966.760	115.082
3	384512.050	585851.680	95.304
4	384607.354	585851.841	11.607
5	384618.961	585851.860	138.706
6	384753.965	585820.027	41.338
7	384771.434	585782.561	15.760
8	384758.968	585772.918	23.949
9	384769.976	585751.649	49.645
10	384783.647	585703.923	17.568
11	384785.165	585686.421	52.004
12	384787.020	585634.450	32.001
13	384794.560	585603.350	58.778
14	384770.054	585549.924	47.865
15	384745.131	585509.059	47.530
16	384712.500	585474.500	73.951
17	384653.406	585430.040	27.835
18	384630.573	585414.121	40.329
19	384592.109	585402.000	154.819
20	384437.619	585391.908	19.516
21	384418.246	585389.548	33.989
22	384384.277	585388.382	16.950
23	384383.695	585405.322	49.907
24	384381.217	585455.167	94.700
25	384376.951	585549.771	41.713
26	384374.289	585591.399	6.473
27	384374.497	585597.869	120.351
28	384372.011	585718.194	4.464
29	384371.765	585722.651	0.158
30	384371.923	585722.659	22.092
31	384370.106	585744.676	45.403
32	384366.333	585789.922	55.161
33	384353.253	585843.510	41.299
34	384342.257	585883.318	34.643
35	384327.669	585914.740	33.867
S(Zona de studiu)=185857 mp P=1822.290m			

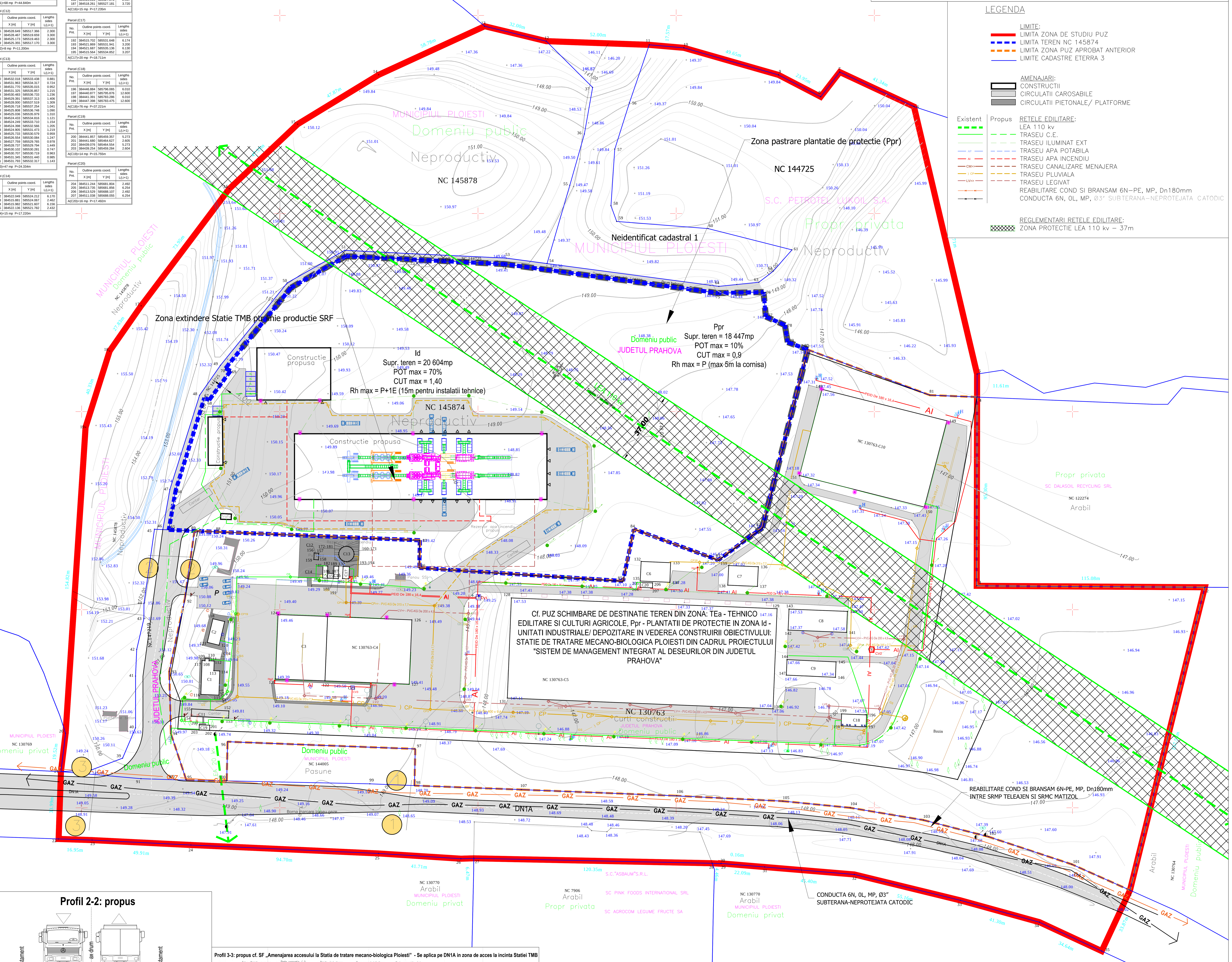

Profil existent si mentinut 1-1 DN 1A

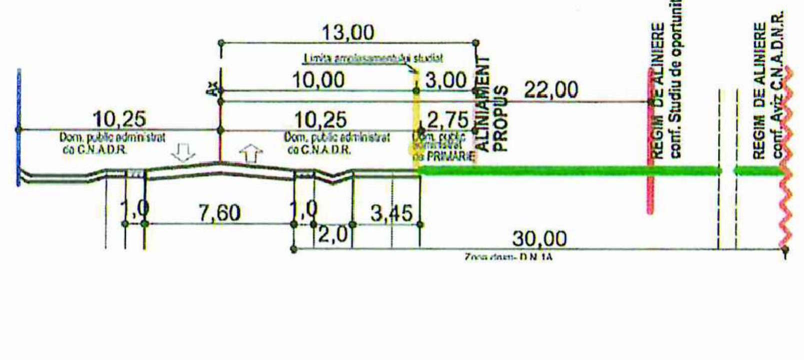

Profil existent 2-2

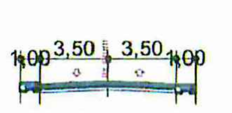

Profil 2-2: propus

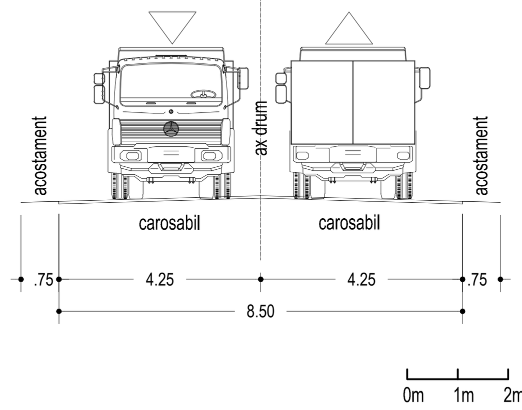

Profil 3-3: propus cf. SF „Amenajarea accesului la Statia de tratare mecano-biologica Ploiesti" - Se aplica pe DN1A in zona de acces la incinta Statiei TMB

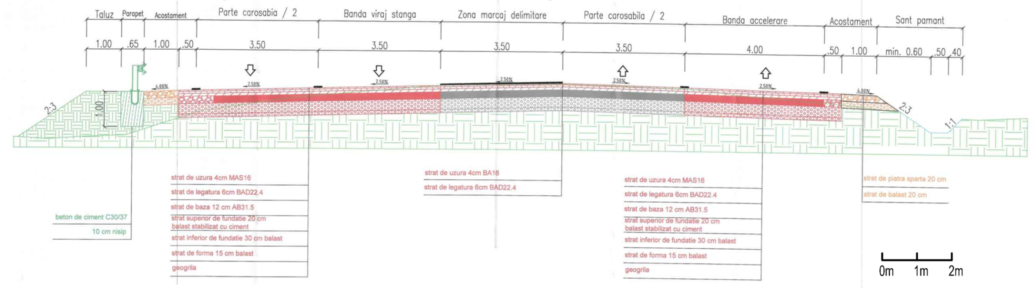

Proiectant general:		Beneficiar: CONSILIUL JUDETEAN PRAHOVA	Proiect nr. 14960/04.08.2020
S.C. TOTAL BUSINESS LAND S.R.L. Nr.ord.reg.com. J01/125/2015 C.U.I. RO34090016 ALBA IULIA, str. Brindusei nr. 24, Birou 1,jud. ALBA		Titlu proiect: PUZ „Schimbare partiala destinatie teren, din zona perdea de protectie in zona industriala (unitati industriale / depozitare) pentru realizarea obiectivului "Modernizarea statiei de tratare mecano-biologica a deseurilor Ploiesti, prin construire linie producere SRF, in vederea obtinerii energiei din deseuri" Nr. Cad. 145874, Tarla 13, Parcela CTD 194, Mun. Ploiesti, Jud. Prahova	Faza: PUZ
CERTIFICAT ISO 9001:2015 nr.09/NAT398 ISO 14001:2015 nr.14/NAR398 SR OHSAS 18001:2008 nr.18/NAT398	Specificatie / Nume / Semnatura; Sef Proiect: Urb-peis. Rascol Mihail Cristian; Proiectat: Urb-peis. Rascol Mihail Cristian; Desenat: Urb. Vacaru Andrei Vlad; Verificat: Ing. Bogdan Petrescu; Scara: 1:1 000; Data: 07/2021	Titlu plansa: Retele tehnico-edilitare	Plansa nr. 03